SMART PARKING®

Advanced Parking Solutions

DYPC 동양PC주식회사
DONGYANG PC, INC

# SMART PARKING worldwide

The number of car has been constantly increasing, but the space for parking is very limited.
In order to utilize the limited spaces, DYPC is trying to make a better parking solution and developing technologies for car parking with the better space-efficiency and more convenient parking solutions.

We, DONGYANG PC. INC, is a leading manufacturer of the packaged rotary parking equipment with the brand name of SMART PARKING® with an advanced technology and have installed in many countries in the world.

We have attained various certificates such as KTSA Korean certificates, CE certificates, UL & CUL certificates, GOST certificates and SASO certificate. We have attained the ISO9001:2008 quality management system and we produce SMART PARKING® in accordance with the ISO quality management system.
Please feel free to contact us with any inquiries or discussions about SMART PARKING®.

SMART PARKING® is the best space efficiency parking system to increase parking capacity at tight and limited space. It can expand parking capacity up to 8 times. SMART PARKING® is fully proved system for a long time and operated in many countries.

## Advantage of SMART PARKING®

- The best in space efficiency
- Small foot print, required only 2 parking lots
- Expand parking capacity up to 8 times
- Easy parking, easy operation
- 5 days installation

# L series

KTSA certificate (SM8), 1-13, Korea
KTSA certificate (SM6), 1-15, Korea
KTSA certificate (SM8), 1-36 Korea
KTSA certificate (SM8), 1-27, Korea
KTSA certificate (SM8), 1-33, Korea
KTSA certificate (SM10), 1-14, Korea
KTSA certificate (SM14), 1-9, Korea
KTSA certificate (SM14), 1-10, Korea
KTSA certificate (SM16), 1-11, Korea
KTSA certificate (SM16), 1-33, Korea
CE certificate(SM-L series), TUV, Germany
CE certificate(SM-SU series), TUV, Germany

Patent and Trade mark resgistered.

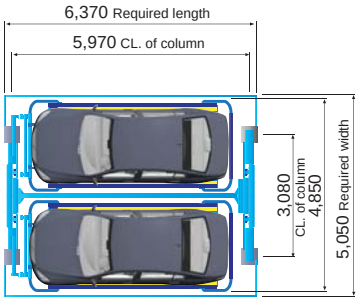


PLAN

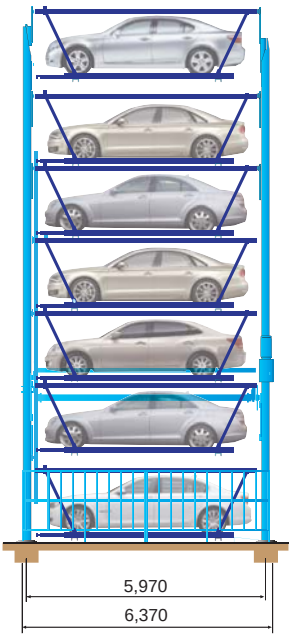


SIDE ELEVATION

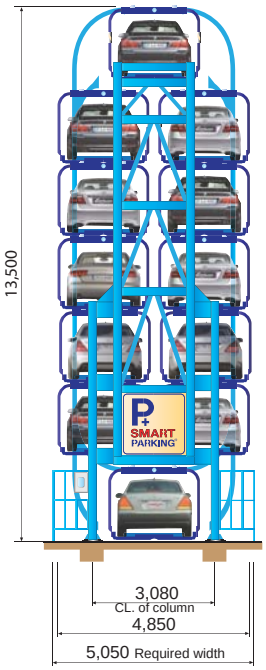


FRONT VIEW

# Specification

## L series (for Sedan cars)

| Model No. | | SM8L | SM10L | SM12L | SM14L | SM16L |
|---|---|---|---|---|---|---|
| Parking Capacity | | 8 cars | 10 cars | 12 cars | 14 cars | 16 cars |
| System Dimension | Length | 6,370 mm | 6,370 mm | 6,370 mm | 6,370 mm | 6,370 mm |
| | Width | 4,850 mm | 4,850 mm | 4,850 mm | 4,850 mm | 4,850 mm |
| | Height | 9,850 mm | 11,680 mm | 13,500 mm | 15,400 mm | 17,200 mm |
| Net weight | | 14.9 ton | 18.6 ton | 22.1 ton | 24.9 ton | 28.6 ton |
| Available car | Length | 5,200 mm | 5,200 mm | 5,200 mm | 5,200 mm | 5,200 mm |
| | Width | 2,100 mm | 2,100 mm | 2,100 mm | 2,100 mm | 2,100 mm |
| | Height | 1,600 mm | 1,600 mm | 1,600 mm | 1,600 mm | 1,600 mm |
| | Weight | 2,150 kgf | 2,150 kgf | 2,150 kgf | 2,150 mm | 2,150 mm |
| Geared Motor | | 7.5 kw | 7.5 kw | 7.5 kw | 11 kw | 15 kw |
| Motor control | | Inverter control | Inverter control | Inverter control | Inverter control | Invertor control |
| Speed | | 3.1~4.2 m/min. | | 3.6~4.2 m/min. | | 5~8 m/min. |
| Available temperature range | | -40°C ~ +55°C | | | | |
| Operation | | Ten-key / Touch Screen / Touch & RFID | | | | |
| Electric power source | | AC 415V / 400V / 380V / 220V, 3PH, 50 / 60Hz | | | | |
| Safety devices | | Photo sensors at the front and rear part for detecting length of car<br>Photo sensors at both side for detecting width of acr<br>Over current relay for motor protection<br>Emergency stop device<br>Overrun stopper on the pallet<br>Car falling prevention device (double guide rail) | | | | |

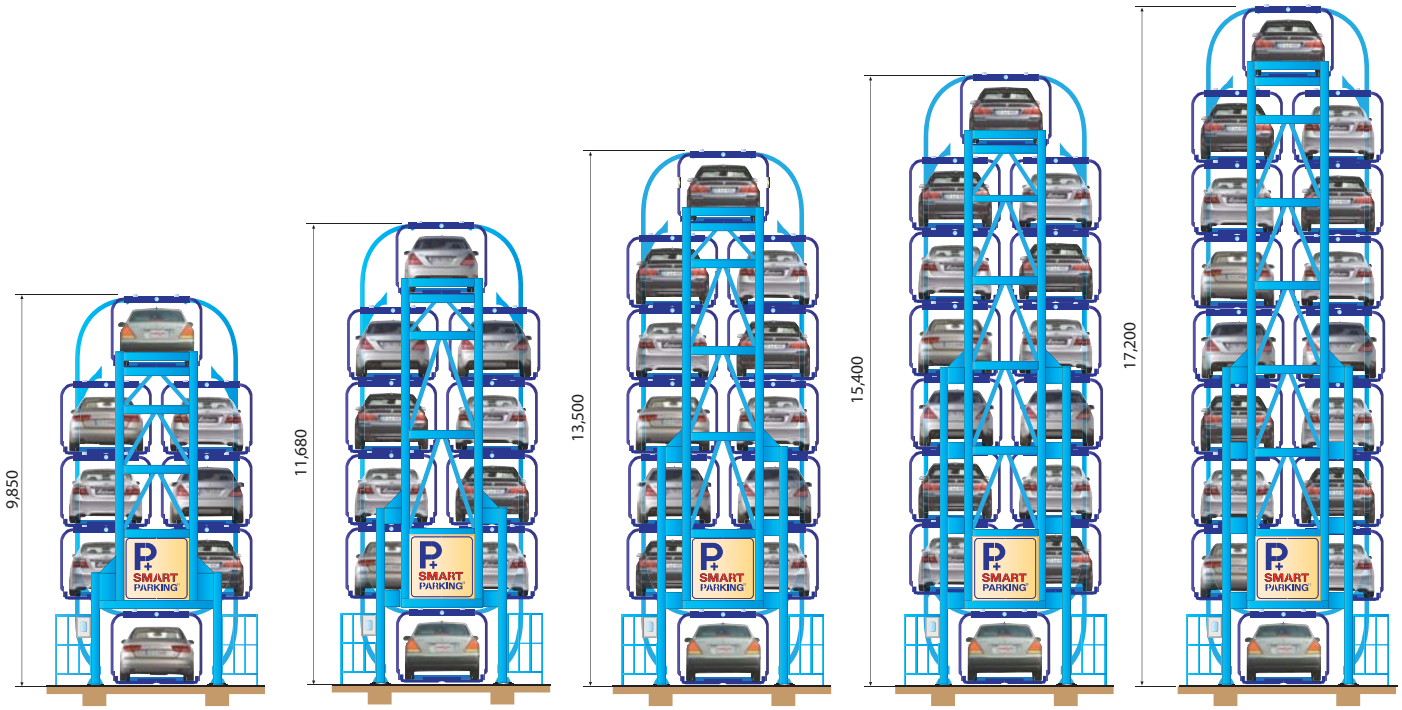


SM8L SM10L SM12L SM14L SM16L

# SU series

KTSA certificate (SM8), 1-13, Korea
KTSA certificate (SM6), 1-15, Korea
KTSA certificate (SM8), 1-36 Korea
KTSA certificate (SM8), 1-27, Korea
KTSA certificate (SM8), 1-33, Korea
KTSA certificate (SM10), 1-14, Korea
KTSA certificate (SM14), 1-9, Korea
KTSA certificate (SM14), 1-10, Korea
KTSA certificate (SM16), 1-11, Korea
KTSA certificate (SM16), 1-33, Korea
CE certificate(SM-L series), TUV, Germany
CE certificate(SM-SU series), TUV, Germany

Patent and Trade mark resgistered.

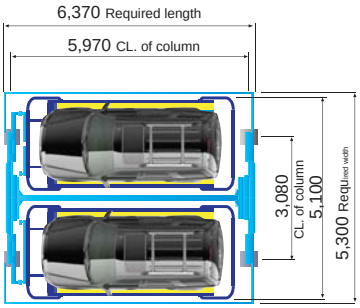


PLAN

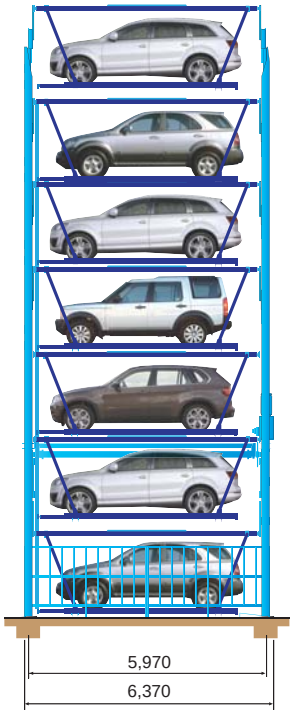


SIDE ELEVATION

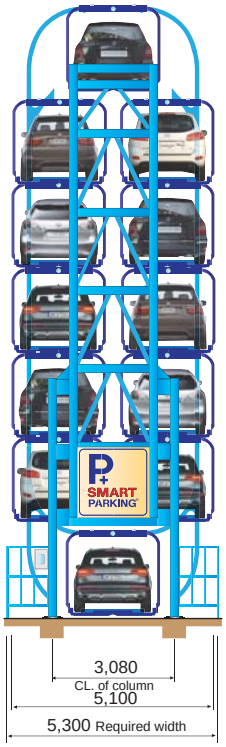


FRONT VIEW

# Specification

## SU series (for SUVs)

| Model No. | | SM8SU | SM10SU | SM12SU |
|---|---|---|---|---|
| Parking Capacity | | 8 cars | 10 cars | 12 cars |
| System Dimension | Length | 6,370 mm | 6,370 mm | 6,370 mm |
| | Width | 5,100 mm | 5,100 mm | 5,100 mm |
| | Height | 11,260 mm | 13,400 mm | 15,500 mm |
| Net weight | | 17.3 ton | 21.2 ton | 24.6 ton |
| Available car | Length | 5,200 mm | 5,200 mm | 5,200 mm |
| | Width | 2,100 mm | 2,100 mm | 2,100 mm |
| | Height | 1,900 mm | 1,900 mm | 1,900 mm |
| | Weight | 2,400 kgf | 2,400 kgf | 2,400 kgf |
| Geared Motor | | 7.5 kw | 7.5 kw | 11 kw |
| Motor control | | Inverter control | Inverter control | Invertor control |
| Speed | | 4~5 m/min. | | |
| Available temperature range | | -40°C ~ +55°C | | |
| Operation | | Ten-key / Touch Screen / Touch & RFID | | |
| Electric power source | | AC 415V / 400V / 380V / 220V, 3PH, 50 / 60Hz | | |
| Safety devices | | Photo sensors at the front part and rear part for detecting length of acr<br>Photo sensors at both side for detecting width of acr<br>Over current relay for motor protection<br>Emergency stop device<br>Overrun stopper on the pallet<br>Car falling prevention device (Double guide rail) | | |

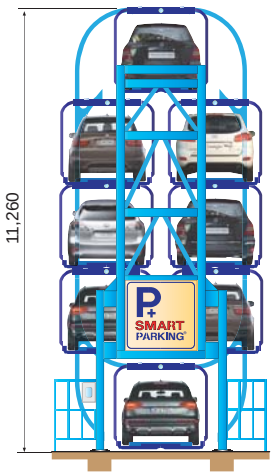


SM8SU

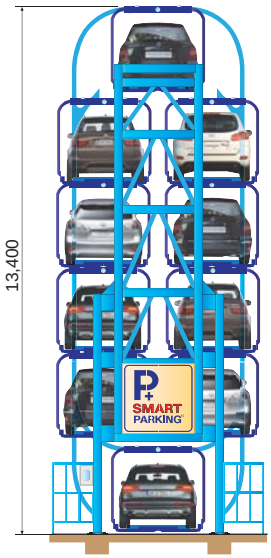


SM10SU

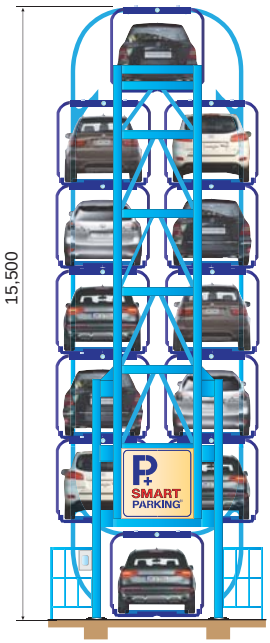


SM12SU

# Layout (Typical)

SM*L for Sedan cars
SM*SU for SUVs

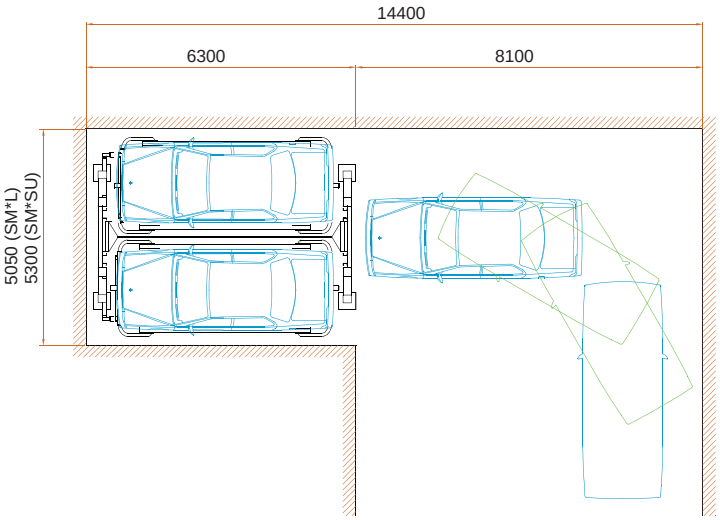


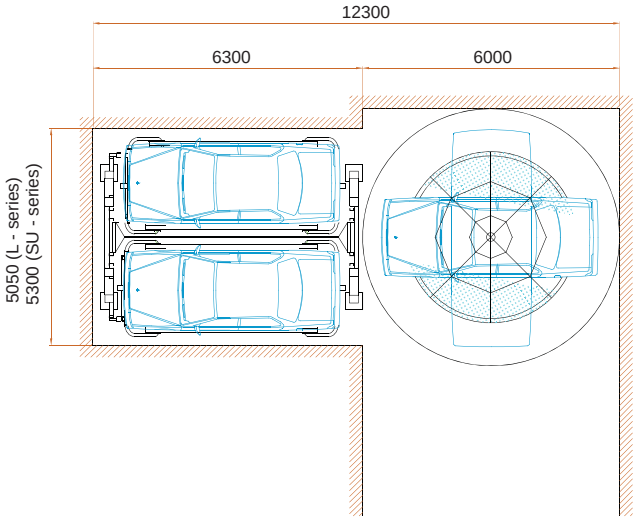


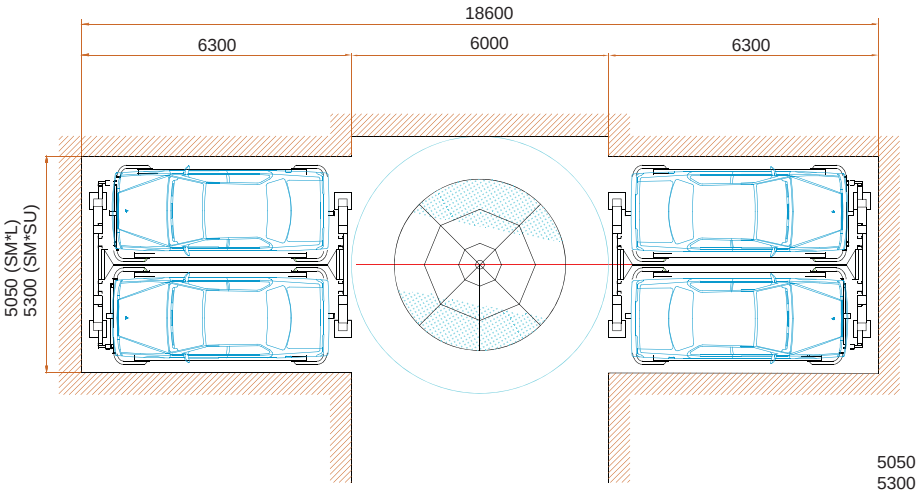


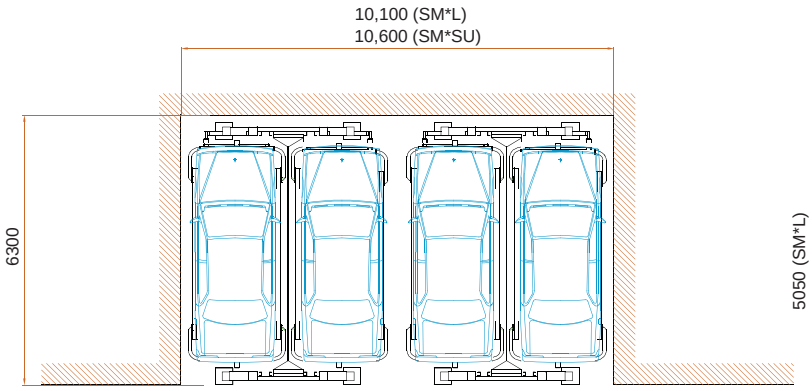


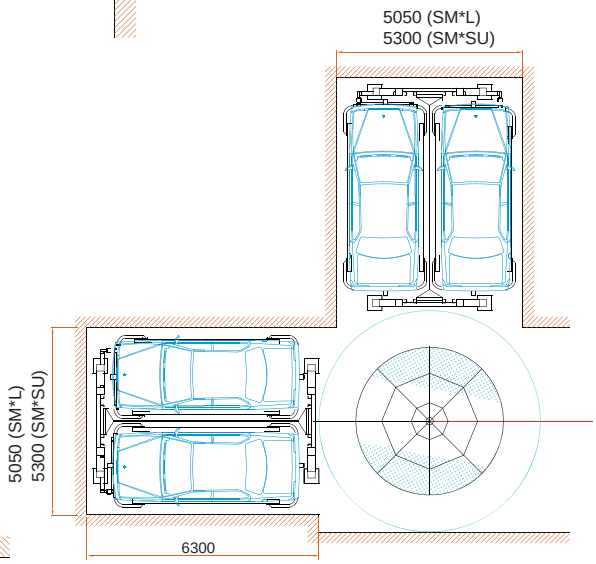

# Factory

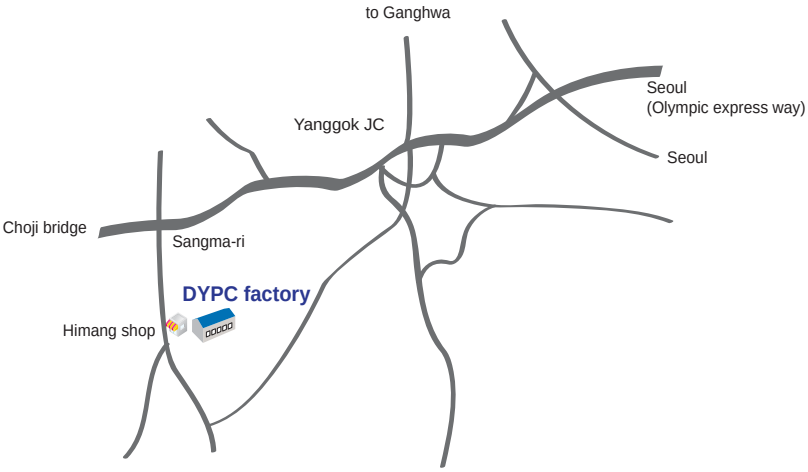

Gimpo factory

Manufacturing of Frame

Manufacturing of Pallet

GIMPO FACTORY

# Projects completed (Typical)

- Project name: Eugenia project
- Deployment: 9 units of SM16L
- Parking capacity: 144 cars
- Place used: Office building
- Location: Mexicocity Mexico

- Project name: Commercial Mexicana
- Deployment: 3 units of SM16L & 1 unit of SM12SU
- Parking capacity: 60 cars
- Place used: Supermarket
- Location: Mexicocity Mexico


Copy right(c) DONGYANG PC, INC. All right reserved.

- Project name: Lecaroz Tamaulipas project
- Deployment: 1 unit of SM12L
- Parking capacity: 12 cars
- Place used: Commercial building
- Location: Mexicocity Mexico

- Project name: Fonda Argentina Restaurant
- Deployment: 1 unit of SM12L
- Parking capacity: 12 cars
- Place used: Restaurant
- Location: Mexicocity Mexico

- Project name: Benito Juarez project
- Deployment: 1 unit of SM10SU
- Parking capacity: 10 cars
- Place used: District office
- Location: Mexicocity Mexico

Copy right(c) DONGYANG PC, INC. All right reserved.

# Projects completed (Typical)

- Project name: Sector 6-5 project
- Deployment: 6 units of SM12L
- Parking capacity: 72 cars
- Place used: Residence
- Location: Bucharest, Romania

- Project name: Sector 6-6 project
- Deployment: 8 units of SM12L
- Parking capacity: 96 cars
- Place used: Residence
- Location: Bucharest, Romania


Copy right(c) DONGYANG PC, INC. All right reserved.

- Project name: Sector 6-1 project
- Deployment: 2 units of SM12L
- Parking capacity: 24 cars
- Place used: Residence
- Location: Bucharest, Romania

- Project name: Sector 6-2 project
- Deployment: 2 units of SM12L
- Parking capacity: 24 cars
- Place used: Public parking
- Location: Bucharest, Romania

Copy right(c) DONGYANG PC, INC. All right reserved.

# Projects completed (Typical)

- Project name: Sector 6-3
- Deployment: 2 units of SM12L
- Parking capacity: 24 cars
- Place used: Residence
- Location: Bucharest, Romania

- Project name: Sector 6-4
- Deployment: 4 units of SM12L
- Parking capacity: 48 cars
- Place used: Residene
- Location: Bucharest, Romania


Copy right(c) DONGYANG PC, INC. All right reserved.

- Project name: Sector 6-7
- Deployment: 4 units of SM12L
- Parking capacity: 48 cars
- Place used: Residence
- Location: Bucharest, Romania

- Project name: Sector 6-8
- Deployment: 2 units of SM12L
- Parking capacity: 24 cars
- Place used: Residence
- Location: Bucharest, Romania

- Project name: Sector 6-9
- Deployment: 4 units of SM12L
- Parking capacity: 48cars
- Place used: Residence
- Location: Bucharest, Romania

Copy right(c) DONGYANG PC, INC. All right reserved.

# Projects completed (Typical)

- Project name: District 11 market project
- Deployment: 15 units of SM12L
- Parking capacity: 180 cars
- Place used: Public parking
- Location: District 19, Tehran, Iran

- Project name: District 4 project
- Deployment: 1 unit of SM10L
- Parking capacity: 10 cars
- Place used: Public parking
- Location: District 4, Tehran, Iran

- Project name: Rasht Dana building
- Deployment: 6 units of SM16L
- Parking capacity: 96 cars
- Place used: Hopital
- Location: Rasht city, Iran


Copy right(c) DONGYANG PC, INC. All right reserved.

- Project name: District 2
- Deployment: 3 units of SM16L
- Parking capacity: 48 cars
- Place used: District office
- Location: Tehran, Iran

- Project name: Shiraz park
- Deployment: 8 units of SM12L
- Parking capacity: 96 cars
- Place used: Public parking
- Location: Shiraz, Iran

Copy right(c) DONGYANG PC, INC. All right reserved.

# Projects completed (Typical)

- Project name: Thai Campus town
- Deployment: 1 unit of SM8L
- Parking capacity: 8 cars
- Place used: Parking revenue
- Location: Bangkok, Thailand

- Project name: Singapore SNEC
- Deployment: 2 units of SM10L
- Parking capacity: 20 cars
- Place used: Hospital
- Location: Singapore


Copy right(c) DONGYANG PC, INC. All right reserved.

- Project name: Toyota Jeddah shop
- Deployment: 1 unit of SM16L
- Parking capacity: 16 cars
- Place used: Car maintenance shop
- Location: Saudi Arabia

- Project name: Chengdu project
- Deployment: 1 unit of SM12SU & 1 unit of SM16L
- Parking capacity: 28 cars
- Place used: Factory parking
- Location: Chendu, China

Copy right(c) DONGYANG PC, INC. All right reserved.

# Projects completed (Typical)

- Deployment: 1 unit of SM10SU
- Parking capacity: 10 cars
- Place used: Factory
- Location: Gibraltar

- Project name: No.6 Convat project
- Deployment: 1 unit of SM10SU
- Parking capacity: 10 cars
- Place used: Government building
- Location: Gibraltar


Copy right(c) DONGYANG PC, INC. All right reserved.

- Project name: Moscow Motorshow
- Deployment: 1 unit of SM8L
- Parking capacity: 8 cars
- Place used: Exhibition
- Location: Moscow, Russia

- Project name: Krasnodar 2
- Deployment: 3 units of SM12L
- Parking capacity: 36 cars
- Place used: Residence
- Location: Krasnodar, Russia

- Project name: Yekaterinburg
- Deployment: 4 units of SM12L
- Parking capacity: 48 cars
- Place used: Furniture market
- Location: Yekaterinburg, Russia

Copy right(c) DONGYANG PC, INC. All right reserved.

# Projects completed (Typical)

- Project name: Lubertsy Apartment
- Deployment: 1 unit of SM12L & 1 unit of SM12SU
- Parking capacity: 24 cars
- Place used: Residence
- Location: Lubertsy, Russia

- Project name: Car dealer
- Deployment: 1 unit of SM8L
- Parking capacity: 8 cars
- Place used: Car dealer
- Location: Moscow, Russia

- Project name: Saratov
- Deployment: 1 unit of SM8L
- Parking capacity: 28cars
- Place used: Warehouse
- Location: Moscow, Russia


Copy right(c) DONGYANG PC, INC. All right reserved.

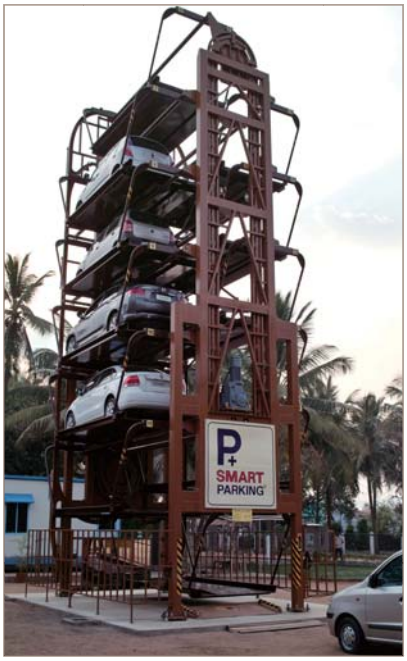


- Project name: Parklayer
- Deployment: 1 units of SM12L
- Parking capacity: 8 cars
- Place used: Promotion
- Location: Coimbatore, India

- Project name: Medica Uruguaya Hospital
- Deployment: 4 units of SM12L & 1 unit of SM10SU
- Parking capacity: 58 cars
- Place used: Parking revenue
- Location: Montevideo, Uruguay

Copy right(c) DONGYANG PC, INC. All right reserved.

# Projects completed (Typical)

- Project name: Kia Motor
- Deployment: 1 unit of SM8L
- Parking capacity: 8 cars
- Place used: Car maintenance
- Location: Guayaquil, Ecuador

- Project name: Costarica 001
- Deployment: 1 unit of SM16L
- Parking capacity: 16 cars
- Place used: Commercial building
- Location: Sanjose, Costarica

- Project name: Wiromet HQ office
- Deployment: 1 unit of SM12L
- Parking capacity: 12 cars
- Place used: Office
- Location: Miklow, Poland


Copy right(c) DONGYANG PC, INC. All right reserved.

- Project name: New world
- Deployment: 1 unit of SM8L
- Parking capacity: 8 cars
- Place used: Commercila building
- Location: Seoul, Korea

- Project name: Dohwadong
- Deployment: 1 unit of SM12L
- Parking capacity: 12 cars
- Place used: Factory
- Location: Incheon, Korea

- Project name: Lacomma building
- Deployment: 1 unit of SM8L & 1 unit of SM7L
- Parking capacity: 15 cars
- Place used: Commercial building
- Location: Seoul, Korea

Copy right(c) DONGYANG PC, INC. All right reserved.

# Projects completed (Typical)

- Project name: Johan building
- Deployment: 1 unit of SM8L
- Parking capacity: 8 cars
- Place used: Commercial building
- Location: Seoul, Korea

- Project name: Hana bank
- Deployment: 1 unit of SM8L
- Parking capacity: 8 cars
- Place used: Commercial building
- Location: Seoul, Korea

- Project name: Hyangnamu building
- Deployment: 1 unit of SM8L
- Parking capacity: 8 cars
- Place used: Commercial building
- Location: Seoul, Korea


Copy right(c) DONGYANG PC, INC. All right reserved.

- Project name: Plus planning
- Deployment: 1 unit of SM8L
- Parking capacity: 8 cars
- Place used: Commercial building
- Location: Seoul, Korea

- Project name: Woori building
- Deployment: 1 unit of SM8L
- Parking capacity: 8 cars
- Place used: Commercial building
- Location: Seoul, Korea

- Project name: Myung building
- Deployment: 1 unit of SM8L
- Parking capacity: 8 cars
- Place used: Commercial building
- Location: Seoul, Korea

Copy right(c) DONGYANG PC, INC. All right reserved.

B413 Woolim Lions Valley,18 Yangpyeong-dong 5ga, Yungdeungpo-gu, Seoul, Korea
**TEL** +82-2-2638-7750~2 **FAX** +82-2-2638-7753 www.dysmart.com

DYPC 동양PC주식회사 DONGYANG PC, INC

ISO 9001:2008

* The technical data and illustrations are subject to change for improvement without any notice